KDJ ELECTRIC WINCH
INSTRUCTIONS

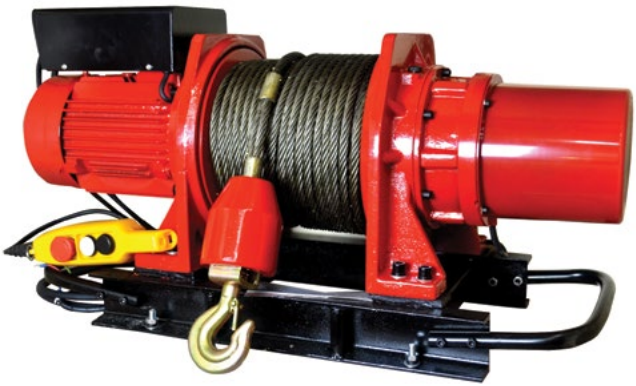

www.warriorwinch.co.uk

CERTIFICATE OF INSPECTION

This product meets the enterprise standard of Q/RKX 06-2004 & CE. It has been examined and tested before being allowed to leave the factory.

Model No.
Inspector:
Date:

PACKING LIST

1. AC Winch machine .....1 set
2. Weight & hook.....1 set
3. Instruction manual.....1 copy
4. Certificate of Inspection.....1 copy
5. Packing list.....1 copy
6. Special wrench.....2 pieces

Features and usage

KDJ-E series electronic winches are a new product which adopts advanced technology. This product is small, lightweight, has easy and convenient installation and is extremely reliable. It can improve working efficiency greatly if used correctly.

This product is suitable for medium and small scale commercial and industrial usage. The power supply is a single phase 230V alternating current or three phase 415V alternating current.

This product is unsuitable in the following conditions:

1. Working environment temperature lower than - 20° or higher than 40°.

2. Where relative temperature is higher than 85% of the (environment) places.

3. Where there is potential fire hazard, danger of explosion, or where there is corrosive gas.

4. Outdoor environments subjective to damp conditions.

5. The power's voltage is lower than 10% of nameplate voltage.

Structure characteristic

This product adopts the single-phase capacitance start motor (or three phase different step motor), NGW planetary transmission, uses steel wire with hook to lift the goods and uses an electro-magnetic braking system.

1. Motor: Adopts single-phase insulating B grade capacitance start motor or three phase different step motor which provides excellent starting power.

2. Transmission structure: Adopts secondary NGW planetary transmission to slow-down. The sun wheel and planetary wheel are made of advanced high grade steels which have been heat treated and are durable with a long life-span. The gear-box has a ductile cast iron mould, strong malleability, and is high precision machined which is tested for quality of manufacture.

3. Electromagnetically applied brake: Adopts the electromagnetic braking device, select advanced friction plates. In case of loss of electrical power, the brake will immediately and automatically engage. It is safe and reliable and will hold for a short period of time. We DO NOT recommend any Hoist is left unattended with the load suspended in the air for long periods of time.

4. The steel wire rope: The steel wire rope is installed on the reel, fixed with screws which guarantee the steel wire rope is securely fastened. Easy changeable rope design.

Technical data

Model	Rated load (kg)	Speed (m/min)	Lift (m)	Rated power (HP)	Voltage (v)	Frequency (Hz)	Electric current (A)	Electric capacity (μF)	Diameter of the cable wire (mm)	Weight (kg)	Work system
KDJ-1000E1	1000	12-18	58	5.5	Three Phase 380V	50HZ	8.7	.....	11	156	S3-25% 20min
KDJ-750E1	750	12-18	58	4			6.5	.....	9	140	
KDJ-500E	500	12-18	58	3			4.8	.....	9	136	
KDJ-300E1	300	10-15	29	1.5			2.8	.....	6	44	
KDJ-300E	300	10-15	29	1.5	Single phase 230V		10	250	6	49	
KDJ-250E	250	10-15	29	1			9.5	200	5	40	
KDJ-200E	200	10-15	29	0.8			9	150	5	36	

Choice and installation of the cable

The specification of your electrical cable is in line with the life-span of the performance of the electric winch motor. It is very important to read this manual carefully before operation. Do not use a power cord which is lower than the specification listed in this manual.

Single phase 220V	0.8HP	1HP	1.5HP	.....	.....	.....
Cable line (mm^2)	4	4	6	.....	.....	.....
Three phase 380V	.....	.....	1.5HP	3HP	4HP	5.5HP
Cable line (mm^2)	.....	.....	2.5	2.5	4	4

1. The extension power cord should not exceed 50 meters. A thicker power cord should be used if exceeding 50 meters in order to prevent overload or voltage drop along the cable.

2. Always check extension and cables for damage before operating any AC winch from a single or three phase supply.

3. When operating on a building site you MUST use the correct cable size.

4. When connecting cables directly always use a circuit breaker and secure firmly.

5. Ensure cables are securely fastened and free from movement to prevent damage & heat.

6. Ensure all wires are connected correctly otherwise this will cause a reduction in power, also any exposed wires could cause an electric shock.

7. In order to guarantee the power fully, the outer cover of electric winch should be grounded.

Safety notice

1. Please ensure that Health and Safety is a priority wherever this unit is used.

2. Persons under 16 years MUST not operate this hoist.

3. The machine should only be operated by skilled technical people. The user or operator should be fully aware of HSE regulations and risks.

4. This machine must only use original manufacturers parts otherwise it may result in a reduction of machine performance.

5. The winch and all its components should be checked frequently. If damaged or splintered, a repair or replacement should be implemented immediately to avoid any danger. **Please Note!! Steel cables are not covered under the warranty and are the sole responsibility of the operator or user to replace if damaged.**

6. Each time before use, operate the machine on an empty load and check the following.

   a. Whether remote switch control can lift, lower and hold a stationary position.
   b. Whether there are unusual noises while operating.
   c. Whether the steel wire rope is damaged. If damage is present, please change immediately before use.
   d. Whether the steel wire rope is wrapped around the drum correctly and that there are at least three wraps on the drum for safety.

7. Please use according to the correct operation method of this manual and according to the data plate specifications. Overloading is forbidden to ensure the safety of personnel and machine.

8. Do not touch or pull with hands any contained article or hanging load while lifting.

9. During working if the applied brake fails, press UP on the remote control switch immediately and then press DOWN to lower again. After unloading, check whether there is the correct level of grease and that the level of pressure is correct. Use again only after checking or repairing.

10. DO NOT hang objects for long periods, this can lead to accidents and damage to the hoist. Recommended hanging period >10mins max with 100% load.

11. This machine MUST never be used to lift people or animals.

12. While changing the steel wire rope, be aware of sharp edges that can be dangerous and cause injury to user.

13. Please install circuit breaker for three phase electric winch.

14. Attention: please follow the instructions for usage: S3-25% 20min. (one cycle of work should be 20 minutes, namely work for five minutes, have a rest for 15 minutes).

Install and experiment

1. Ensure that the machine is installed correctly and safely by a qualified electrician.

   a. Ensure that the working voltage of the installation site corresponds with the demand stipulated on the data plate of the product, The supply voltage should be within its specified value range of – or + 10%.

   b. Check whether the UP and DOWN buttons are operating the hoist in the correct direction, if not consult your local supplier for advice.

   c. No load testing – hoist should run free from vibration and any unusual noises other than the motor or drum.

   d. Load testing - Go up and down with small rated load several times. Check machinery, electric attachment and that the connection is normal and reliable.

   e. When applying brakes under the rated load, the applied braking should not exceed 1 revolution of the steel wire rope drum before a full stop is achieved.

Maintenance of winch

1. This machine adopts planetary gears to reduce the speed of the hoist. It is essential for it to be correctly lubricated. Please put grease in the grease hole every three months to lubricate.

2. The wire rope must be maintained correctly. If the rope becomes corroded pull out the whole rope and lubricate thoroughly.

3. Please ensure that the winch is regularly maintained and overhauled to ensure efficient working and safety. Under normal usage a full overhaul of the winch is recommended every two years, contact your local service department or supplier.

Troubleshooting

Problem	Reason	Solution
The motor does not turn when pressing the UP/ DOWN lifting switch.	• Check power supply • Check electrical wire or extension cable • Stop button depressed • The condenser is burnt out	• Unplug and plug in again • Check the wiring and repair • Repair or adjust the switch • Change the condenser
Short out	*Rectifier damaged	*Change the rectifier
The load lowers after button is released	• The automatic spring is out of shape • Grit slice wearing and tearing • It is series greasy with the grit slice • Overload	• Change the automatic spring • Check or change the gear and bearing • Remove the greasy of grit slice • Lighten load
The noise unusually increases	• Insufficient lubrication • The gear and bearings are damaged after using for a long time • Fasten position to loose and take off	• Add lubricating grease • Check or change the gear and bearing • Check whether the assemble one fasten or not
Electric leakage	• Check wires and extensions for damage • Interior wiring touches the shell	• Check earth or connect the earth • Check or remove the interior wiring
A loud noise and a large spark emits from the motor when pressing the UP/ DOWN lifting switch and the hoist can't lift to the recommended height	• The mains power voltage is on the low side. • The input cable section is too long or thin, and voltage drop. • The interval is too narrow between grit slice and apply the brake block • The coil of apply the brake burn out	• Check the voltage of the power. • Check whether the cable section meet the requisites. • Change the girt slice or adjust the interval, keep 0.35-0.45Mm. • Change the coil of the apply the brake.

"#" Denotes Single phase electric winch,
"*" Denotes Three phase direct current.

WIRING DIAGRAM

SWITCH WIRING
SINGLE PHASE

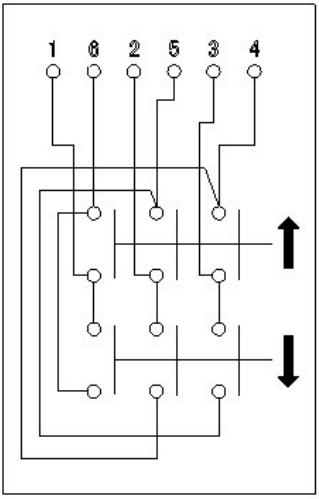

SWITCH WIRING
3 PHASE

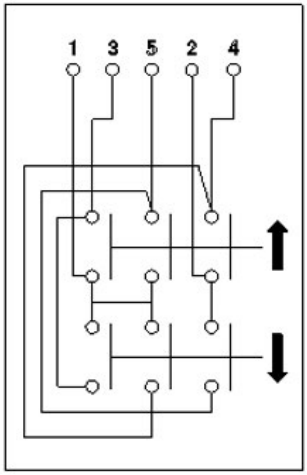

KDJ-200E/250E/300E MOTOR WIRING FOR SINGLE PHASE

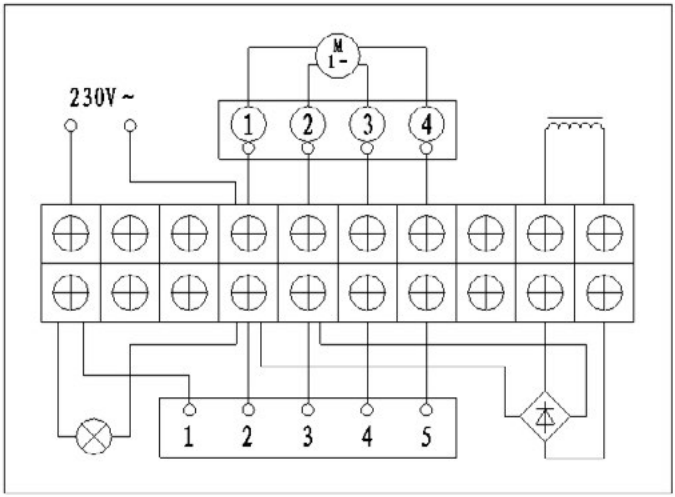

KDJ-300E1 MOTOR WIRING FOR 3 PHASE

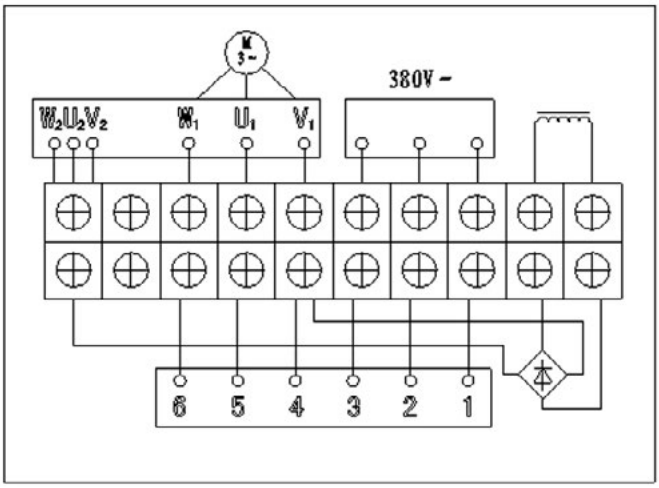

KDJ-500E1/750E1/1000E1 MOTOR WIRING FOR 3 PHASE

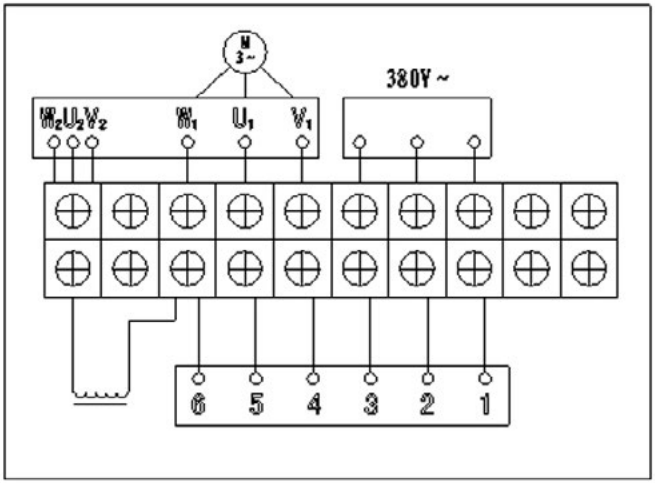

KDJ-200E/250E/300E Spare Parts List

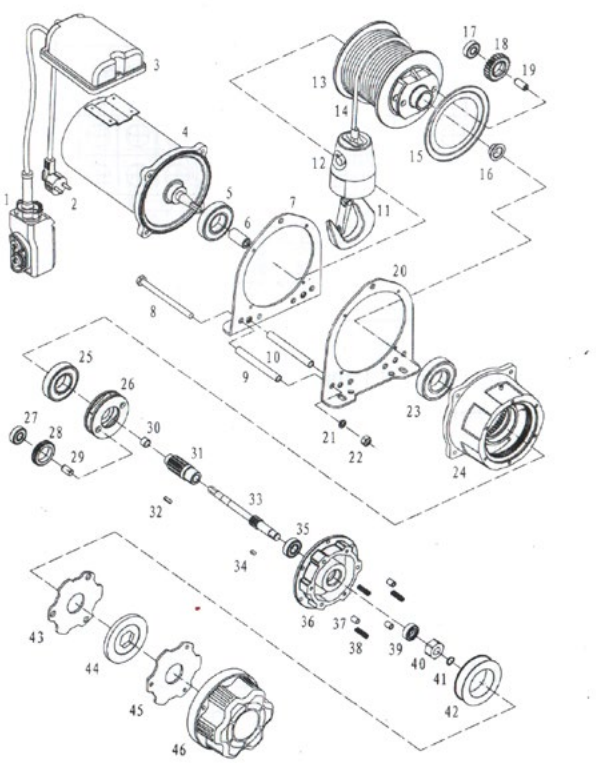

No:	Description:	Qty:
1	Control Assembly	1
2	Power Plug	1
3	Electric Box	1
4	Induction Motor	1
5	Bearing	1
6	Sleeve	1
7	Motor Support Rack	1
8	Bolt	3
9	Rack Fixed Tube	3
10	Tube	1
11	Hook	1
12	Block	1
13	Drum	1
14	Wire Rope	1
15	Plate	1
16	Axle Collar	1
17	Bearing	2
18	2nd Gear	2
19	2nd Gear Shaft	2
20	Gear Box Support Rack	1
21	Spring Washer	3
22	Nut	3
23	Bearing	1

No:	Description:	Qty:
24	Gear Box	1
25	Bearing	1
26	Gear Shelf	1
27	Bearing	2
28	1st Gear	2
29	1st Gear Shaft	2
30	Axle Collar	1
31	2nd Shaft	1
32	Flat Key	1
33	1st Shaft	1
34	Flat Key	1
35	Bearing	1
36	Gear Box Cover	1
37	Brake Fixed Tube	3
38	Brake Spring	3
39	Oil Seal	1
40	Brake Sleeve	1
41	Axle Elastic Collar	1
42	Winding	1
43	Active Brake Flake	1
44	Friction Flake	1
45	Static Brake Flake	1
46	Plastic Back Cover	1

KDJ-500E1/750E1/1000E1 Spare Parts List

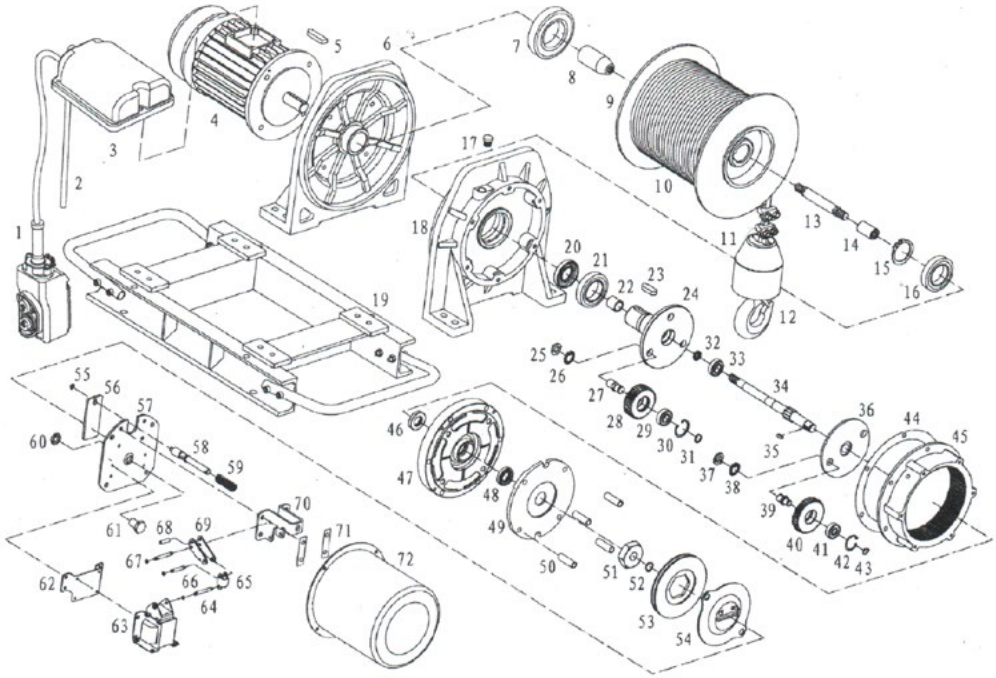

No:	Description:	Qty:
1	Control Assembly	1
2	Power Cord	1
3	Electric Box	1
4	Induction Motor	1
5	Flat Key	1
6	Motor Support Rack	1
7	Bearing	1
8	Sleeve	1
9	Drum	1
10	Wire Rope	1
11	Block	1
12	Hook	1
13	Coupling	1
14	Sleeve	1
15	Axle Elastic Collar	1
16	Bearing	1
17	Oil Plug	1
18	Gear Box Support Rack	1
19	Base Plate	1
20	Oil Seal	1
21	Bearing	1
22	Axle Collar	1
23	Flat Key	1
24	Strength Shaft	1

No:	Description:	Qty:
25	Round Nut	3
26	Lock Washer	3
27	2nd Gear Shaft	3
28	2nd Gear	3
29	Bearing	3
30	Hole Elastic Collar	3
31	Axle Elastic Collar	3
32	Oil Seal	1
33	Bearing	1
34	1st Shaft	1
35	Flat Key	1
36	2nd Shaft	1
37	Round Nut	2
38	Lock Washer	2
39	1st Gear Shaft	2
40	1st Gear	2
41	Bearing	2
42	Hole Elastic Collar	2
43	Axle Elastic Collar	2
44	Paper Enclose	1
45	Gear Box	1
46	Bearing	1
47	Gear Box Cover	1
48	Oil Seal	2

No:	Description:	Qty:
49	Static Tray	1
50	Brake Fixed Tube	4
51	Brake Sleeve	1
52	Axle Elastic Collar	1
53	Friction Flake	1
54	Active Brake Flake	1
55	Axle Elastic Collar	1
56	Brake Depressor	1
57	Brake Setting Pad	1
58	Brake Shaft	1
59	Brake Spring	1
60	Nut	1
61	Adjusting Bolt	1
62	Setting Plate	1
63	Electromagnet	1
64	Connection Pin	2
65	Connection Plate	1
66	Connection Pin	1
67	O Ring	6
68	Connection Pin	1
69	Connection Plate	1
70	Setting Shelf	1
71	Stopping Race	2
72	Plastic Back Cover	1